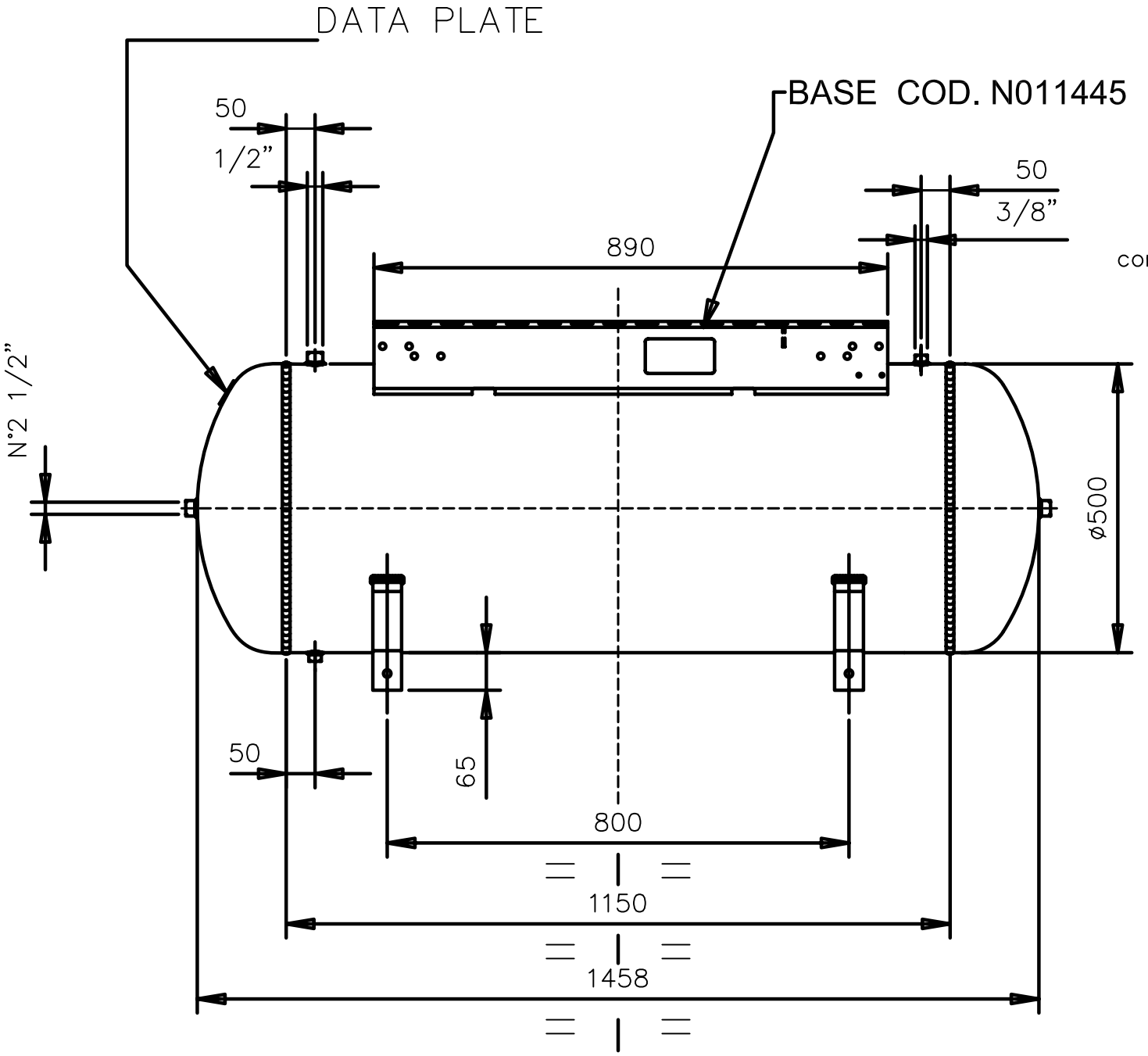

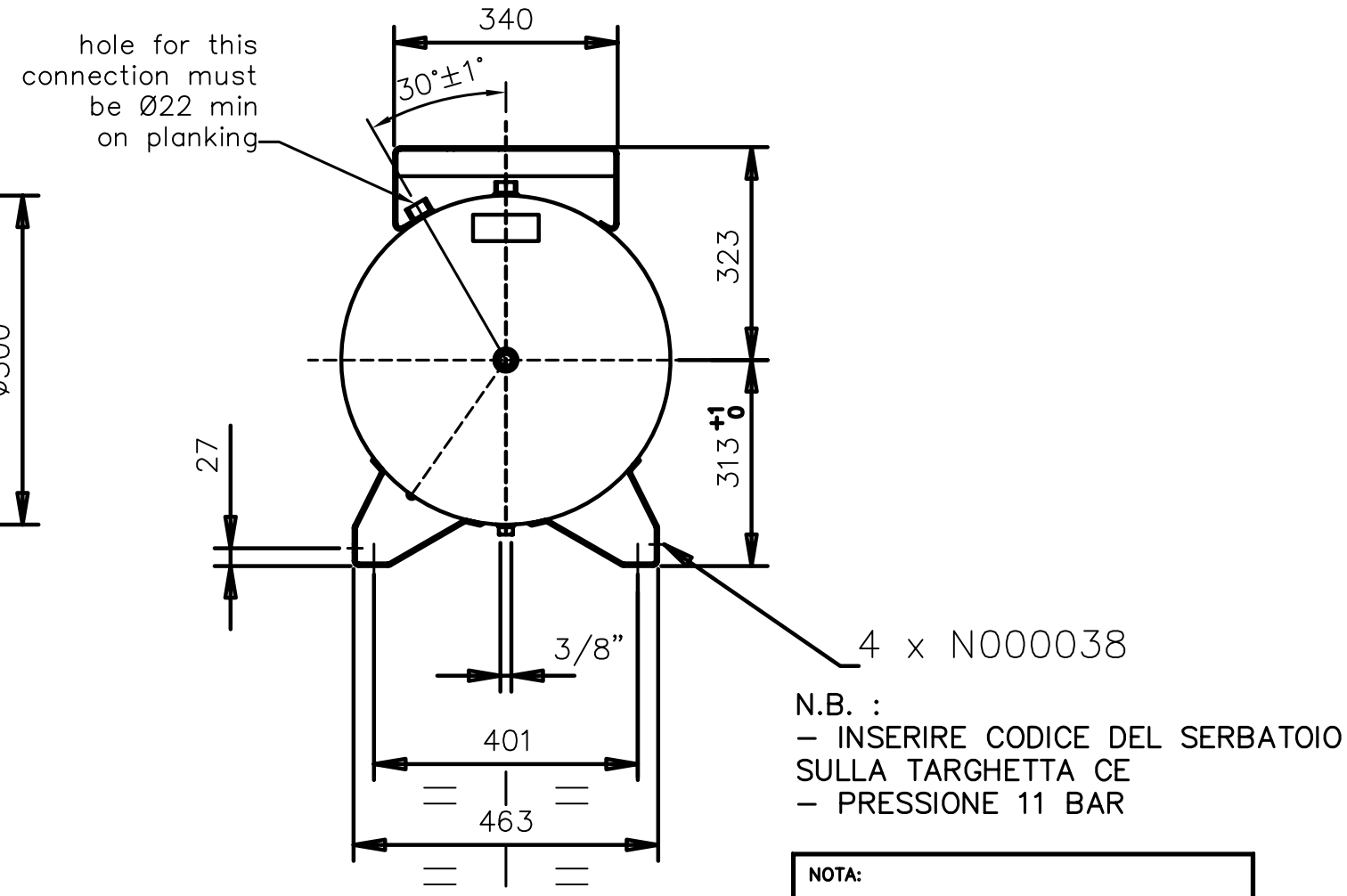

N.B. :
– INSERIRE CODICE DEL SERBATOIO SULLA TARGHETTA CE
– PRESSIONE 11 BAR

NOTA:
IL SERBATOIO DEVE ESSERE COSTRUITO COME PRESCRITTO DALLE VIGENTI NORMATIVE CE

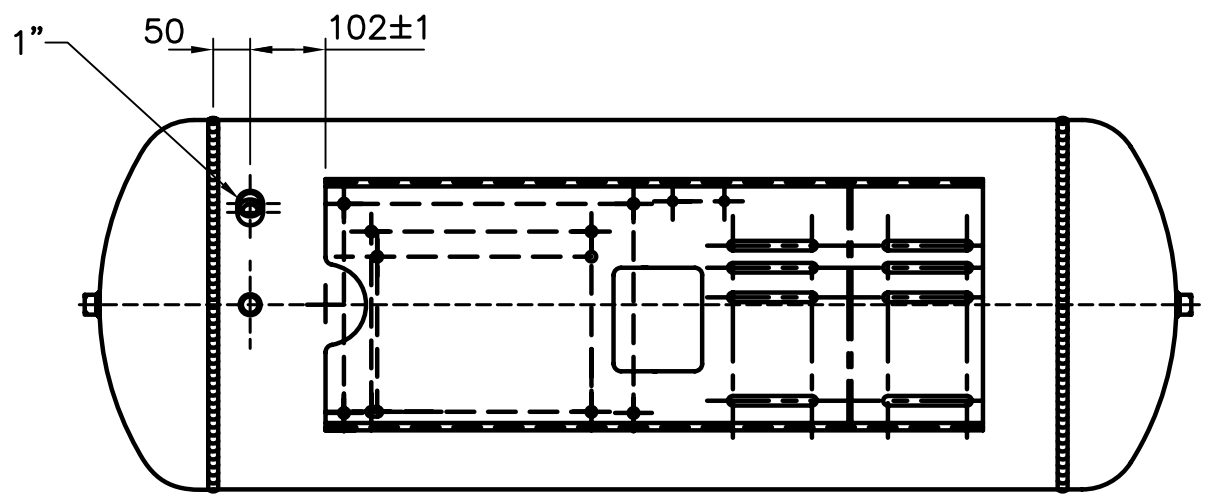

N°	MODIFY DESCRIPTION	DATE	SIGN.
A	MODIFICATA DESCRIZIONE	08.03.13	G.V.

REPLACE

RUGOSITI Ra um

NOT INDIC. CHAMFER

HEAT/SUPERFICIAL TREATMENT

HARDNESS

MATERIAL

DRAWN	
DATE	10.12.12
SIGN.	G.VENTURI

DIMENSION WITHOUT TOLLERANCE INDICATION
UNI ISO 22768-1-

SCALE 1:10

nu air
Compressors and tools S.p.A.

VALID FOR

DRAWING DESCRIPTION
SERB. 270F B890 K50 CE 11B 1/2"

This drawing is propriety of NU AIR Compressors and Tools S.p.A.. Hand over or reproduction, partial as well, is forbidden at any level. Each abuse will be legally prosecuted

DRW.N° 87NCS09

MODIF. PAGE